Operating manual

SPINVISTA NEO

SPINVISTA EVO

HEMA

Operating manual

Status of the data: 1.12.2021, Version 1.04
Language of the original version: German

Contact

For further information please contact:

HEMA Maschinen- und Apparateschutz GmbH
Am Klinggraben 2
63500 Seligenstadt
Germany
Phone: +49(0)6182/773-0
Fax: +49(0)6182/773-35
E-mail: info@hema-group.com
Web: www.hema-group.com

Art.-Nr. 80-80-8050 13122021

TABLE OF CONTENTS

I. Technical specifications

Dimensions SPINVISTA NEO	Ø 290 mm (290 x 341) x 32mm
Dimensions SPINVISTA EVO	Ø 252 mm (252 x 303) x 32mm
Field of view SPINVISTA NEO	410 cm^2
Field of view SPINVISTA EVO	284 cm^2
Housing and attachments	Aluminium
O-ring seals	NBR
Spin disk (Rotor)	Aluminum, toughened safety glass
Motor	Brushless with blocking and reverse polarity protection
Rotational speed	2.300 U/min
Nominal voltage	24 VDC ± 3V
Power consumption idle	ca. 12 W (24V, 500 mA)
Current	0.5 A (Anlaufstrom 3,5 A / 24 VDC)
Noise	<65 dB (A) DIN EN ISO 11200
Supply	min 2 x 0.75 mm^2 PUR encased
	max. 7.5 mm outer diameter
Storage temperature	+10 °C ... + 70 °C permissible
Operating temperature	+10 °C ... + 50 °C permissible
Overpressure / sealing air (optional)	min. 30 mbar, max. 0.5 bar
Air consumption	~1,1 m^3/h (at 2 0mbar)
Air cleanliness	ISO 8573-1:2010[3:4:3] required
Cleaning	Isopropanol, Glass cleanser
Application	Milling centers, turning and grinding machines
Maximum tilt angle disc	5°
Orientation of connection	any
Einsatzmedien	Commercially available cooling lubricants
Weight	SPINVISTA NEO: 2.1 kg
	SPINVISTA EVO: 1.8 kg
Dimension	Packaging 600 x 400 x 150 mm

2. Wichtige Hinweise

These operating instructions are intended for trouble-free use of SPINVISTA NEO and SPINVISTA EVO (hereinafter referred to as SPINVISTA). Attention is a prerequisite for the fulfillment of any warranty claims. Before using and/or installing the SPINVISTA, Be sure to carefully read this manual through to the end and follow the contents.

- SPINVISTA may only be used in accordance with the conditions of use described below. Any use deviating from this shall be the sole responsibility of the user.
- Comply with all information, values and tolerances (eg. energy supply) stated in this manual. Ensure properly prepared compressed air.
- Consider the prevailing environmental conditions under which SPINVISTA is to be used.
- Carefully store these operating instructions at the place of use of the SPINVISTA.
- Observe the regulations of the professional association, the technical inspection association or corresponding national, international and European regulations.
- Remove all transport measures such as paper, foils, etc. before initial assembly. The legally prescribed disposal of the individual materials (in recycling collection containers) must be observed.
- Installation and commissioning must only be carried out by qualified specialist personnel in accordance with these operating instructions.

Symbols and their meaning

⚠ Warning
☛ Note

3. General Description

All models of the SPINVISTA series are rotating window systems. SPINVISTA is electrically operated and serves to clean a field of vision of machine disks by centrifugal force.

☛ The assembly steps shown in the operating instructions show the SPINVISTA EVO. The installation of the SPINVISTA NEO is done analogously.

4. Models

SPINVISTA is available in two different variants. The two models differ essentially by their diameter.

- SPINVISTA NEO has a diameter of 290 mm, SPINVISTA EVO a diameter of 252 mm.
- The construction height of both variants is 32 mm for the adhesive version and 27 mm for the screwed version.
- Both versions are available with both screw and adhesive mounting.

5. Use

Coolant, which is mostly used in machine tools, sprays onto the windows of the machine during machining. The cooling lubricant and chips hinder the view into the interior of the machine tools during the machining process.

- SPINVISTA is used to clean the field of view of machine windows by centrifugal force.
- SPINVISTA was developed for use within machine tools.
- The mounting of the glued version of the swivel window must only be done on glass surfaces or new polycarbonate panes.

6. Misuses / Warnings

- SPINVISTA has been developed exclusively as a viewing window in the closed working area of machine tools..
- When operating SPINVISTA, the coolant jet should not be aimed directly at the window. SPINVISTA must not be completely or partially submerged in liquid.
- SPINVISTA must not be operated if parts such as chips between base unit and rotor have jammed.

7. Residual Risks

- SPINVISTA rotates at approx. 2,300 rpm during operation. In the case of defects, therefore, rotating parts can be thrown away with high energy. Use is therefore permitted only in the closed working range of machine tools.
- Due to the large number of possible cooling lubricants, it is conceivable that the sealing of the adhesive bond and the adhesive bond could be solved. Therefore, it must be checked on a case-by-case basis whether the sealant used is compatible with the cooling lubricant used.
- SPINVISTA automatically decelerates to a low speed after switching off the operating voltage, but does not come to a complete stop; the lower the operating voltage, the longer the caster. For this reason, do not open the work area of the machine until the spin disks is completely stopped.

- Danger of cutting: If the rotating viewing window is damaged, glass parts may be loosened or even the entire viewing window may be destroyed. Wear safety gloves when troubleshooting.

8. WARRANTY

The intended use of SPINVISTA presupposes that it is only used within the limits specified by the technical specification. Other uses exclude all other services. The warranty is valid for 12 months after delivery.

9. ASSEMBLY, RECONSTRUCTION, MAINTENANCE AND REPAIR

Please note the installation instructions and use suitable tools and original accessories. During all work on the SPINVISTA, the applicable safety and installation instructions must be observed.
Any dismantling of the SPINVISTA and subsequent processing by the customer without prior written approval will reduce the operational safety and loss of warranty.

10. TRANSPORT, STORAGE, TEMPORARY STORAGE

SPINVISTA is only to be transported, stored and temporarily stored in its original packaging.
SPINVISTA contains fragile components. During transport and storage care must be taken not to damage these components.

11. TYPENBEZEICHNUNG

The type designation and serial number on the back serve for the clear identification and traceability of the supplied SPINVISTA. It is unique to each unit and essential for traceability.
Never destroy the nameplate, it must always be legible. All warranty claims expire by removal or disregard of the nameplate.

12. Assembly Instructions

Please check on delivery if:

- The supplied SPINVISTA matches the desired SPINVISTA.
- The delivery is complete.
- Components are damaged.
- The component documentation is complete.

For the installation of the SPINVISTA, the supply of electrical energy and compressed air (see technical data) must be ensured.
The mounting surface on the machine window must be clean and level to ensure optimum adhesion of all adhesive and sealing elements. Especially when using the adhesive version, care must be taken to ensure that the mounting surfaces are clean and free of grease

When installing the SPINVISTA, no damage may occur. Damage may result in reduced operating safety and loss of warranty. Pay attention to a distortion-free installation and compliance with the permissible loads according to delivery conditions and operating instructions.

- Recommended tightening torques

M3 Screws	1 Nm
Cover screw	8 Nm

- Recommended tools

  Scraper
  Two-bolt wrench or torque adapter
  Wrench TX10

13. Mounting SPINVISTA

Perform the assembly in the following steps:

1. Mounting position

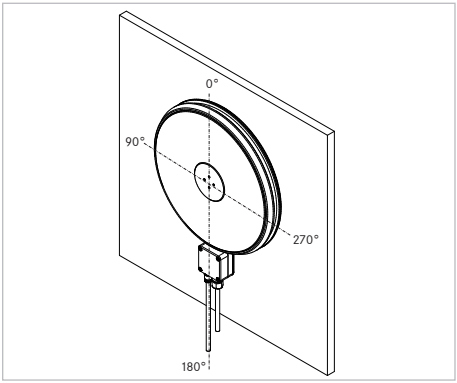

Figure 1: SPINVISTA alignment

Define the mounting position on the inside of the viewing window of the machine.
The installation position (Figure 1) is optional with the SPINVISTA series. However, it is convenient to set the orientation in 90° increments to suit the future power supply.

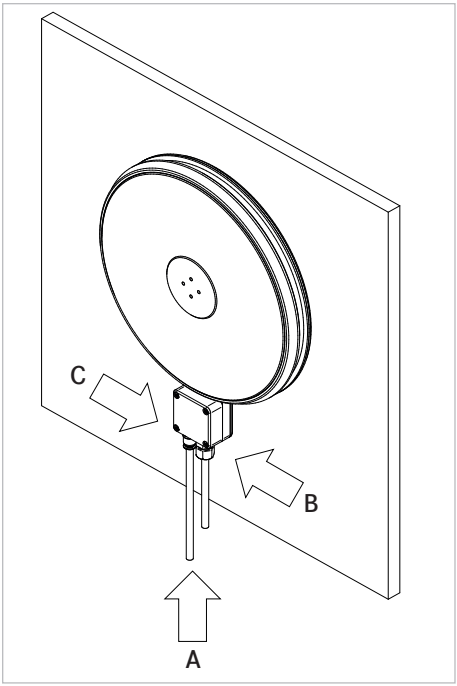

Figure 2: Energy supply SPINVISTA

The position of the energy supply (Figure 2) can be freely selected in 90° increments on the SPINVISTA spin window (positions A, B or C).

2. Cleaning the mounting surface

Clean the inside of the machine screen thoroughly and over a large area. The mounting position must be free of dust as well as oils and greases to ensure optimum adhesion of the adhesive surface.

3. Prepare the mounting frame

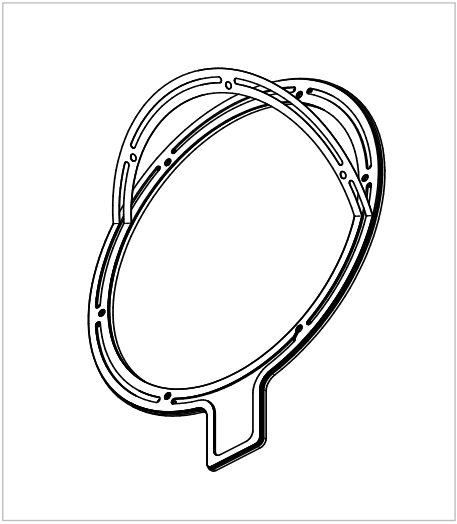

Figure 3: Mounting frame with adhesive film

Remove the protective paper from the back of the mounting frame.
Take care not to damage or touch the adhesive surface. Push the mounting frame with the adhesive surface to the selected mounting position. Check from the opposite side of the protective glass whether the adhesive surface all around has contact with the glass.
If necessary, continue to press the mounting frame in the appropriate places so that there are no more air bubbles.
The full adhesive power is reached only after 24 hours.

4. Seal gap

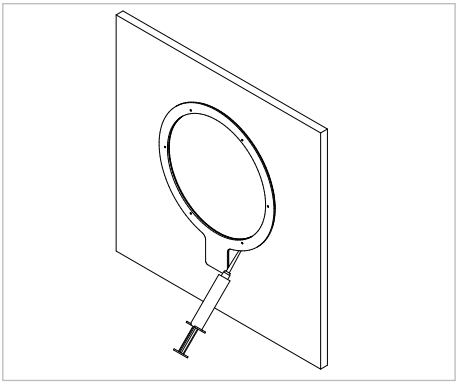

Figure 4: Mounting frame with sealant

To protect the adhesive seal from the effects of coolant, seal the gap between the mounting frame and the machine protection disc on the outside with the enclosed sealant (Figure 4).
This protects the adhesive seal from contact with occurring cooling lubricants.

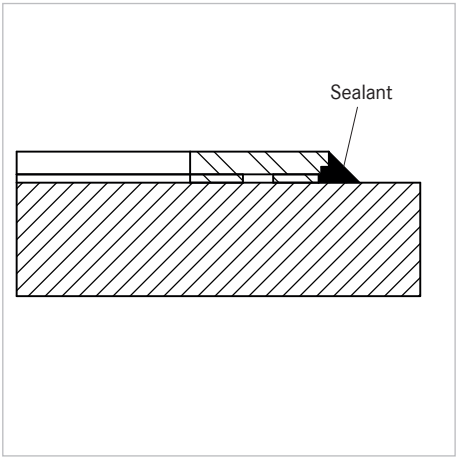

Figure 5: Sealing joint

- Pull a 45° joint between the mounting frame and the safety window (Figure 5) to the level of the base unit support surface.
- Note the curing time of the sealant.

5. Disassembly SPINVISTA

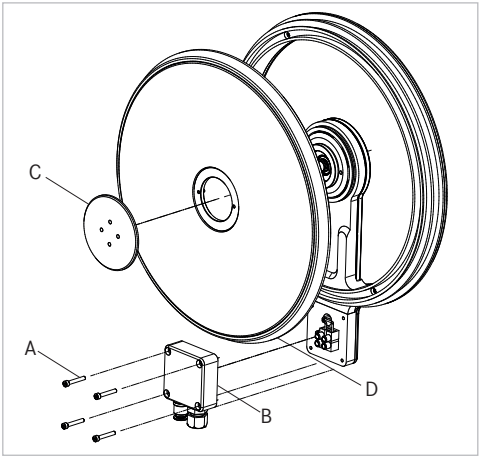

Figure 6: Disassembly

Disassemble the preassembled parts of the SPINVISTA to allow further assembly (Figure 6).

Loosen the screws (A) of the lower cover cap (B) and place them with the cover cap on a stable surface.

Remove the screw cap (C) in front of the turntable (D) by turning it counterclockwise and also place it securely in a suitable place.

6. Mounting the base unit on the frame

Insert the O-ring (A) into the corresponding groove on the underside of the base unit (B). Be careful not to overstretch the O-ring. Press the base unit lightly onto the mounting plate and align the base unit holes with those of the mounting plate (Figure 7).

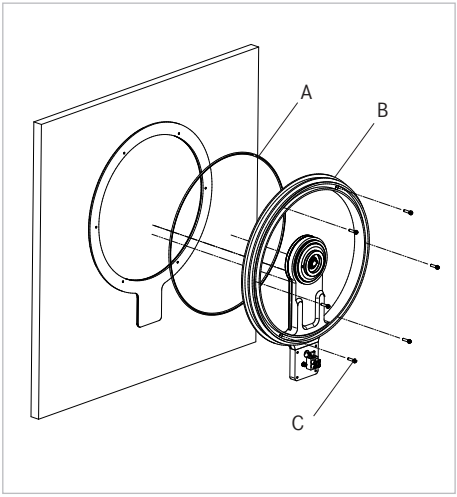

Figure 7: Mounting base unit

Starting from the top, screw the base unit crosswise at the mounting plate using the supplied screws (C). Before tightening the screws, check that the O-ring still sits in the groove provided and is not crushed.
Use screw locking device »medium strength« or tighten the screws included in the scope of delivery with coating to a tightening torque of 1 Nm.
Screws (C):
SPINVISTA NEO: 10 pcs M3x11
SPINVISTA EVO: 6 pcs M3x11

7. Connection of electrical energy

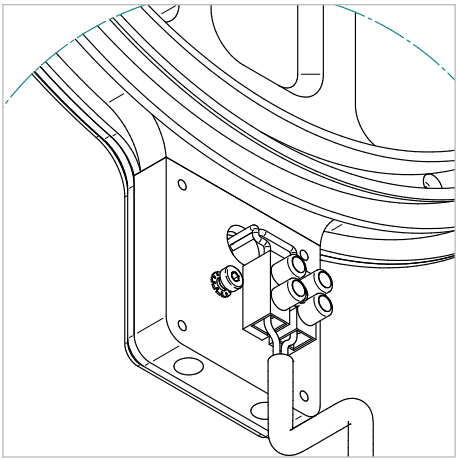

Figure 8: Electrical connection

Feed the connection cable through the cable gland of the cover. Use a cable with a outside diameter up to 7.5 mm.
Select the cable cross-section according to the required cable length and the required operating voltage on the SPINVISTA.
Remove 20 mm from the sheath of the connecting lead. Insulate the conductors and provide them with wire end ferrules.

Connect the connecting cable to the luster terminal. Pay attention to the correct polarity:

Blue = Gnd
Red = +24V
Green / yellow = ground wire (optional)

Optionally, you can attach a ground lead to the housing by attaching a ground wire to a ring eyelet and screwing it to the fixation point (I) with the appropriate screw and pulley (Figure 9a). Make sure that the cable connections are secure. Then carefully pull the cover over the cable to the screw-on position.
You can select the mounting position in 3 positions (see page 9, Figure 2)

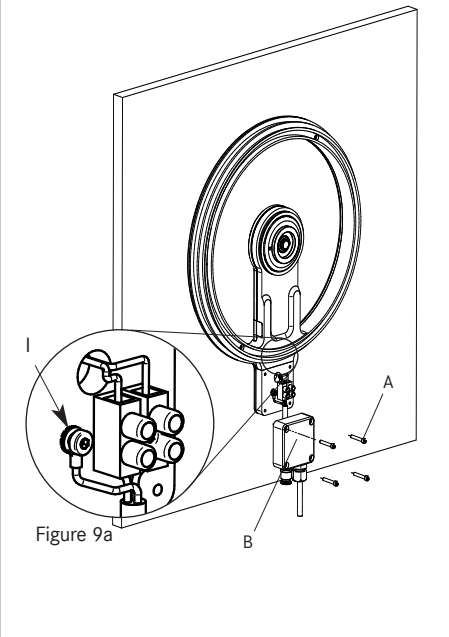

Figure 9: Mounting the cable cover

Make sure that the cables underneath the cover cannot be crushed.

Depending on the orientation of the cover (power supply), it may be necessary to change the position of the grounding screw and the terminal block or their orientation.

Pay attention to the seal on the underside of the lid, which must not slip out of the groove or be squeezed when tightening the fixing screws.

Secure the lid with the included screws (A) M3x20 (Fig. 9).

Tighten the union nut of the cable gland (B) to ensure the tightness of the electrical connections.

8. Connection of compressed air (optional)

In order to avoid any condensation on the machine safety window, connect the sealing air connection to the existing push-in fitting. Use an externally calibrated 6 mm compressed air hose (Figure 10).

Alternatively, you can also use another fitting with G1/8 ", if a different hose diameter is desired.

The SPINVISTA can **be used without sealing air,** as the sealing air has no effect on the tightness of the device. Remove the push-in fitting and replace it with a blanking plug.

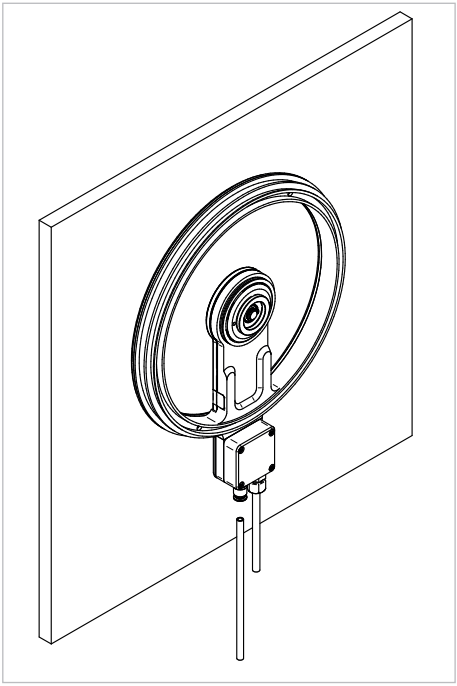

Figure 10: Connection of optional compressed air

If changes are made to the compressed air connection, make sure that the connection is sufficiently sealed again.

The optional compressed air supply for the SPINVISTA should be at least 30 mbar, but not higher than 0.5 bar. It is therefore essential to check whether the operating pressure meets the requirements before commissioning the compressed air supply.

The use of sealing air is recommended if there is condensation on the machine safety window inside the SPINVISTA.

9. Mounting the rotation disk

Before mounting the rotation disk, check it to see if any damage has occurred.

Then place the hub hub (A) on the base unit motor, making sure that the rotor hub dowels engage the motor holes (Figure 11, page 15).

Fix the turntable lightly with your hand to prevent it from falling down.

Carefully place the screw cap on the threads of the motor to avoid damaging it. For now, tighten them only by hand (clockwise) (Figure 11).

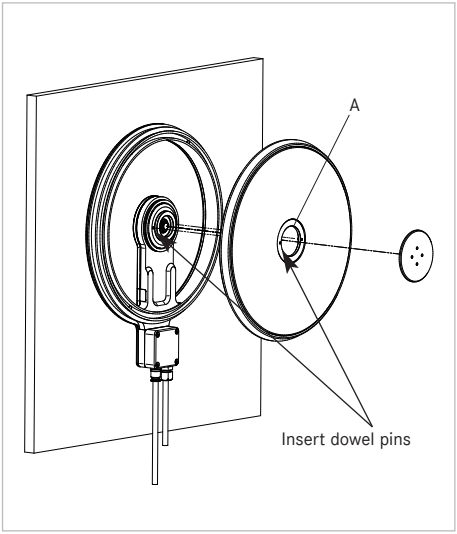

Figure 11: Assembly turntable

Insert dowel pins in the holes

Check that the seal of the screw cap rests flat on the turntable and is not squeezed out.

Tighten the screw cap to 12 Nm using a two-bolt nut driver or mounting tool.

14. Commissioning

After proper installation of the SPINVISTA the operational readiness is to be checked:

- Check the flexibility of the rotation window by turning it manually.
- With the SPINVISTA supplied with sealing air, air flows out at the annular gap between the base and the rotating window.
- All fasteners must be checked for their specified tightening torque
- Start a test run taking into account all applicable regulations and safety regulations.

15. Maintenance and Care

- Clean your SPINVISTA regularly from buildup.
- Check if any small parts have accumulated between the base unit and the turntable and remove them.
- Check daily the condition of the electrical supply line as well as the pneumatics.
- Remove chips on the SPINVISTA immediately.

16. CE marking CE

The SPINVISTA EVO and SPINVISTA NEO spin windows in the supplied design meet the requirements of the Machinery Directive 2006/42/EC and are marked with the CE symbol.

17. EC DECLARATION OF CONFORMITY

In accordance with EC Machinery Directive 2006/42/EC, Annex II A

We hereby declare HEMA Maschinen- und Apparateschutz GmbH
Am Klinggraben 2
63500 Seligenstad, Germany,

that the machines of the same design and type described below and in the version we have placed on the market comply with the basic safety and health requirements of the EC Machinery Directive 2006/42/EC.
In the case of a modification of the machinery not agreed with us, this declaration loses its validity.

Machine

Designation	SPINVISTA
Function	Spinning window
Type designation	SPINVISTA EVO, SPINVISTA NEO

Conformity with the following EU directives:

2006/42/EC	EC Machinery Directive
2014/30/EU	EU directive electromagnetic compatibilityt

Applied harmonized standards:

DIN EN ISO 12100:2011	Security of machines
EN 61000-6-2:2005	EMC immunity
EN 61000-6-3:2007+A1:2011	EMC emitted interference

Furthermore, the following other standards and technical specifications were considered:

DIN EN 12417:2009-07	Machine Tools - Safety - Machining Centers
DIN EN ISO 23125:2015-04	Machine Tools - Safety - Lathes
DIN EN ISO 16089:2016-06	Machine Tools - Safety - Fixed Grinding Machines

Person who provides the technical documentation:

HEMA Maschinen- und Apparateschutz GmbH
Am Klinggraben 2
63500 Seligenstadt, Germany
Phone: +49(0)6182/773-0
Fax: +49(0)6182/773-35
E-mail: info@hema-group.com
Web: www.hema-group.com

Steffen Walter
Managing Director

Philipp Sendelbach
CE authorized person

Am Klinggraben 2, 63500 Seligenstadt
Seligenstadt, 1. December 2021

18. Drawings

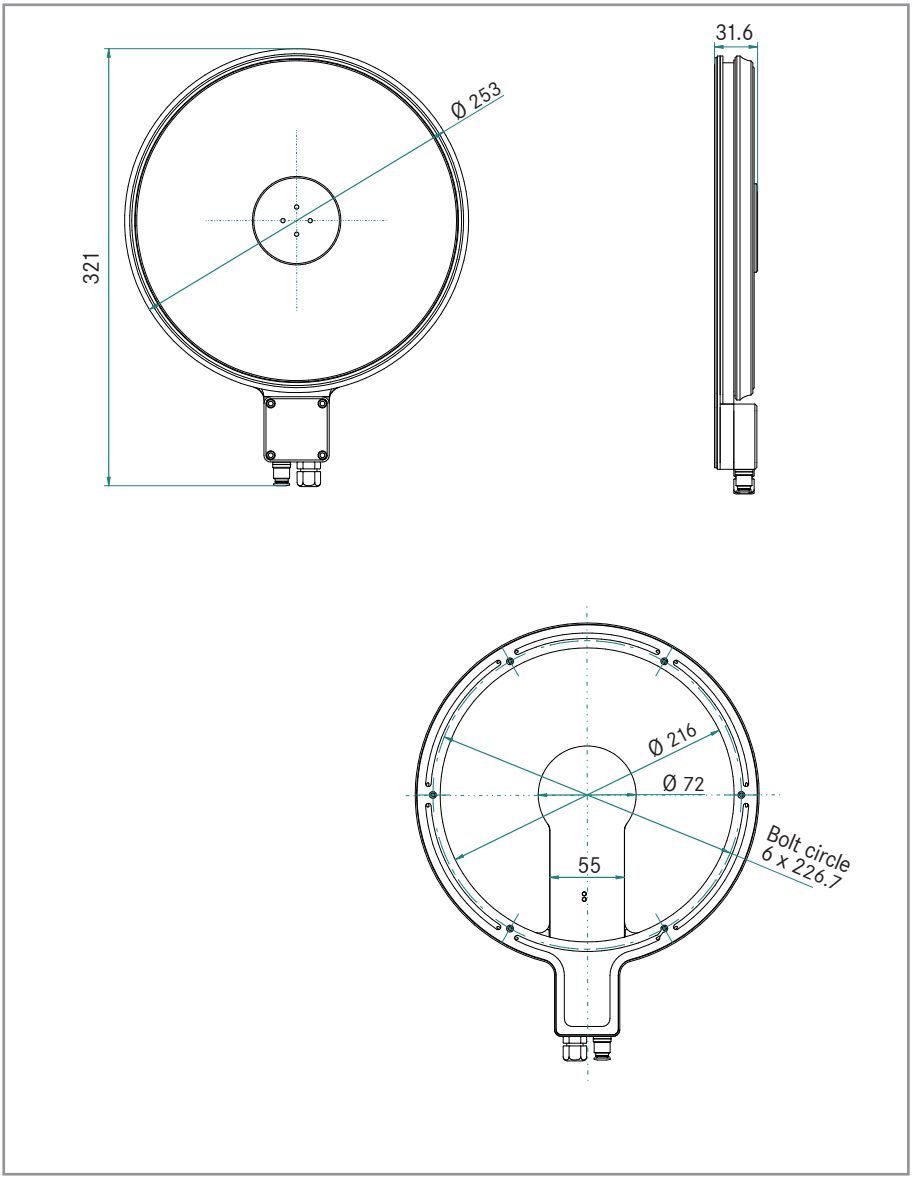

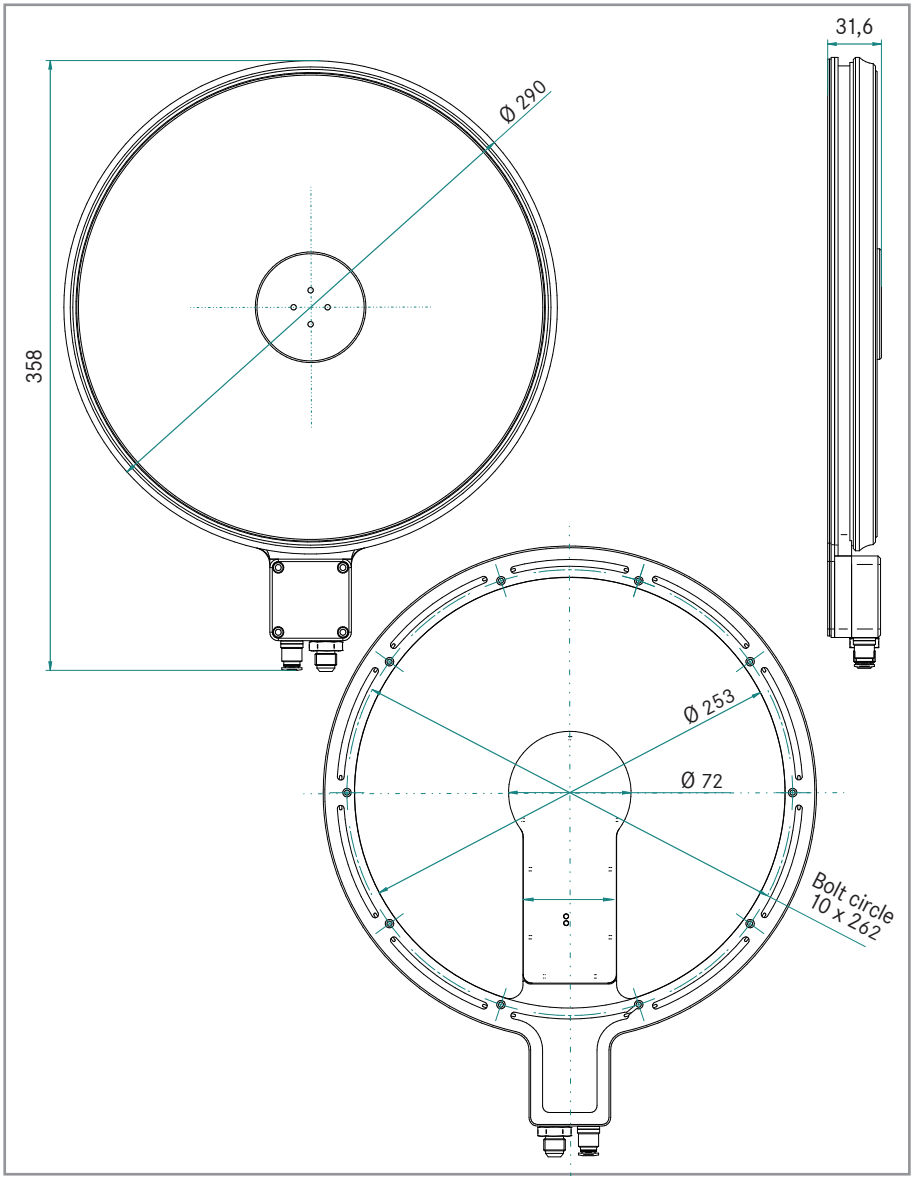

SPINVISTA NEO

HEMA Maschinen- und Apparateschutz GmbH
Am Klinggraben 2
63500 Seligenstadt
Germany
Phone: +49(0)6182/773-0
Fax: +49(0)6182/773-35
E-mail: info@hema-group.com
Web: www.hema-group.com